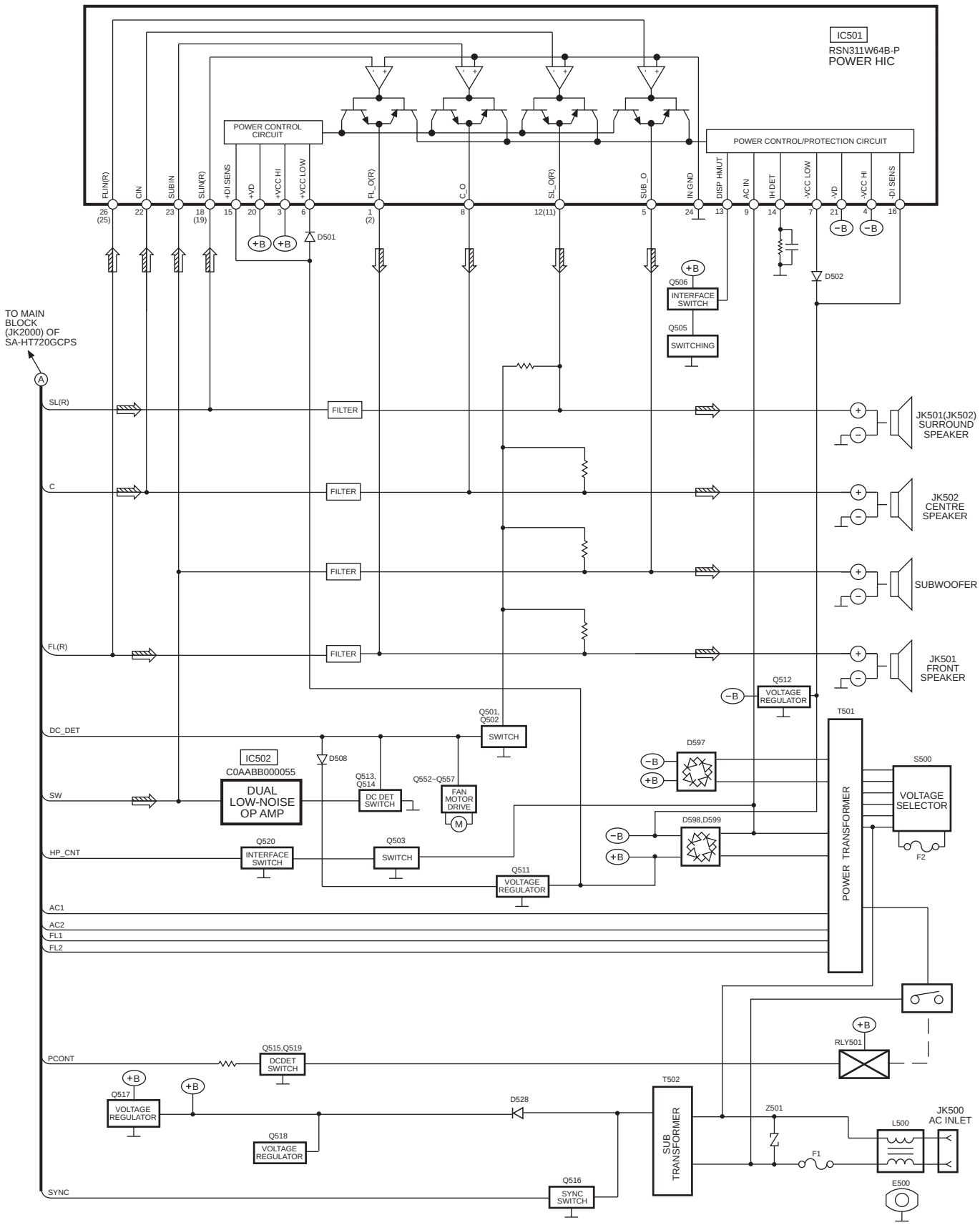

SIGNAL LINES

: MAIN SIGNAL LINE

( ) Indicates Pin No. of Right Channel

Note : Signal Lines are applicable to the Left Channel only.